California State Department of Education
Form #SE-03 (Rev. 7-81)

To be filled in by school personnel.

CONFIDENTIAL

Eye Report for Children with Visual Problems

R L B

NAME OF PUPIL _____ SEX _____
(Type or print) (First) (Middle) (Last)

ADDRESS _____ DATE OF BIRTH _____
(No. and street) (City or town) (County) (State) (Month) (Day) (Year)

GRADE _____ SCHOOL _____ ADDRESS _____

I. HISTORY

A. Probable age at onset of vision impairment. Right eye (O.D.) _____ Left eye (O.S.) _____

B. Severe ocular infections, injuries, operations, if any, with age at time of occurrence _____

C. Has pupil's ocular condition occurred in any blood relative(s)? _____ If so, what relationship(s)? _____

II. MEASUREMENTS

(See back of form for preferred notation for recording visual acuity and table of approximate equivalents.)

A. VISUAL ACUITY

	DISTANT VISION			NEAR VISION			PRESCRIPTION		
	Without correction	With best correction*	With low vision aid	Without correction	With best correction*	With low vision aid	Sph.	Cyl.	Axis
Right eye (O.D.)									
Left eye (O.S.)									
Both eyes (O.U.)							Date		

B. If glasses are to be worn, were safety lenses prescribed in: Plastic _____ Tempered glass _____ *with ordinary lenses

C. If low vision aid is prescribed, specify type and recommendations for use. _____

D. FIELD OF VISION: Is there a limitation? _____ If so, record results of test on chart on back of form.

What is the widest diameter (in degrees) of remaining visual field? O.D. _____ O.S. _____

E. Is there impaired color perception? _____ If so, for what color(s)? _____

III. CAUSE OF BLINDNESS OR VISION IMPAIRMENT

A. Present ocular condition(s) responsible for vision impairment. (If more than one, specify all but underline the one which probably first caused severe vision impairment.)
O.D. _____
O.S. _____

B. Preceding ocular condition, if any, which led to present condition, or the underlined condition, specified in A.
O.D. _____
O.S. _____

C. Etiology (underlying cause) of ocular condition primarily responsible for vision impairment. (e.g., specific disease, injury, poisoning, heredity or other prenatal influence.)
O.D. _____
O.S. _____

D. If etiology is injury or poisoning, indicate circumstances and kind of object or poison involved. _____

IV. PROGNOSIS AND RECOMMENDATIONS

A. Is pupil's vision impairment considered to be: Stable _____ Deteriorating _____ Capable of improvement _____ Uncertain _____

B. What treatment is recommended, if any? _____

C. When is reexamination recommended? _____

D. Glasses: Not needed _____ To be worn constantly _____ For close work only _____ Other (specify) _____

E. Lighting requirements: Average _____ Better than average _____ Less than average _____

F. Use of eyes: Unlimited _____ Limited, as follows: _____

G. Physical activity: Unrestricted _____ Restricted, as follows: _____

TO BE FORWARDED BY EXAMINER TO:

Date of examination _____

Signature of examiner _____ Degree _____

Address _____

If clinic case: Number _____ Name of clinic _____

Preferred Visual Acuity Notations

DISTANT VISION. Use Snellen notation with test distance of 20 feet. (Examples: 20/100, 20/60). For acuities less than 20/200 record distance at which 200 foot letter can be recognized as numerator of fraction and 200 as denominator. (Examples: 10/200, 3/200). If the 200 foot letter is not recognized at 1 foot record abbreviation for best distant vision as follows:

HM	HAND MOVEMENTS (Specify inches or feet)
PLL	PERCEIVES AND LOCALIZES LIGHT IN ONE OR MORE QUADRANTS
LP	PERCEIVES BUT DOES NOT LOCALIZE LIGHT
No LP	NO LIGHT PERCEPTION

NEAR VISION. Use standard A.M.A. notation and specify best distance at which pupil can read. (Example: 14/70 at 5 in.)

TABLE OF APPROXIMATE EQUIVALENT VISUAL ACUITY NOTATIONS

These notations serve only as an indication of the approximate relationship between recordings of distant and near vision and point type sizes. The teacher will find in practice that the pupil's reading performance may vary considerably from the equivalents shown.

Distant Snellen	Near A.M.A.	Near Jaeger	Near Metric	% Central Visual Efficiency for Near	Point	Usual Type Text Size
20/20 (ft.)	14/14 (in.)	1	0.37 (M.)	100	3	Mail order catalogue
20/30	14/21	2	0.50	95	5	Want ads
20/40	14/28	4	0.75	90	6	Telephone directory
20/50	14/35	6	0.87	50	8	Newspaper text
20/60	14/42	8	1.00	40	9	Adult text books
20/80	14/56	10	1.50	20	12	Children's books 9-12 yrs
20/100	14/70	11	1.75	15	14	Children's books 8-9 yrs.
20/120	14/84	12	2.00	10	18	Large type text
20/200	14/140	17	3.50	2	24	
12.5/200	14/224	19	6.00	1.5		
8/200	14/336	20	8.00	1		
5/200	14/560					
3/200	14/900					

FIELD OF VISION. Record results on chart below.

Type of test used: _____ Illumination in ft. candles: _____

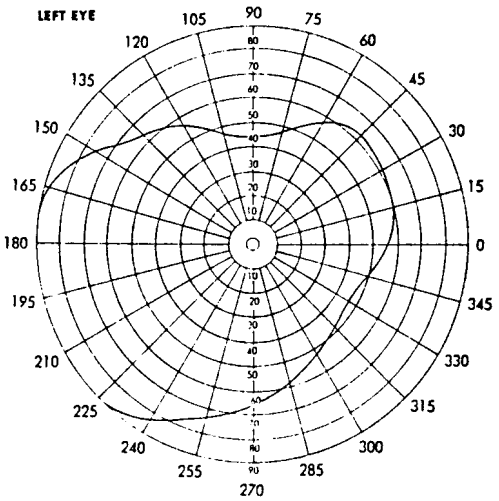

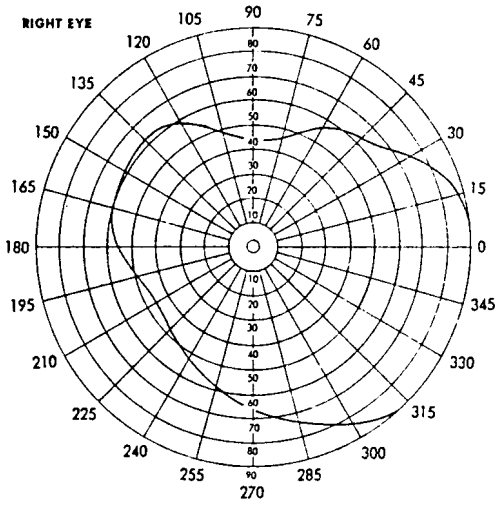

Test object: Color(s) _____ Size(s) _____

Distance(s): _____

Test object: Color(s) _____ Size(s) _____

Distance(s): _____

Used with permission from the Northern California Society to Prevent Blindness, 4200 California St., Suite 101, San Francisco, CA 94118.